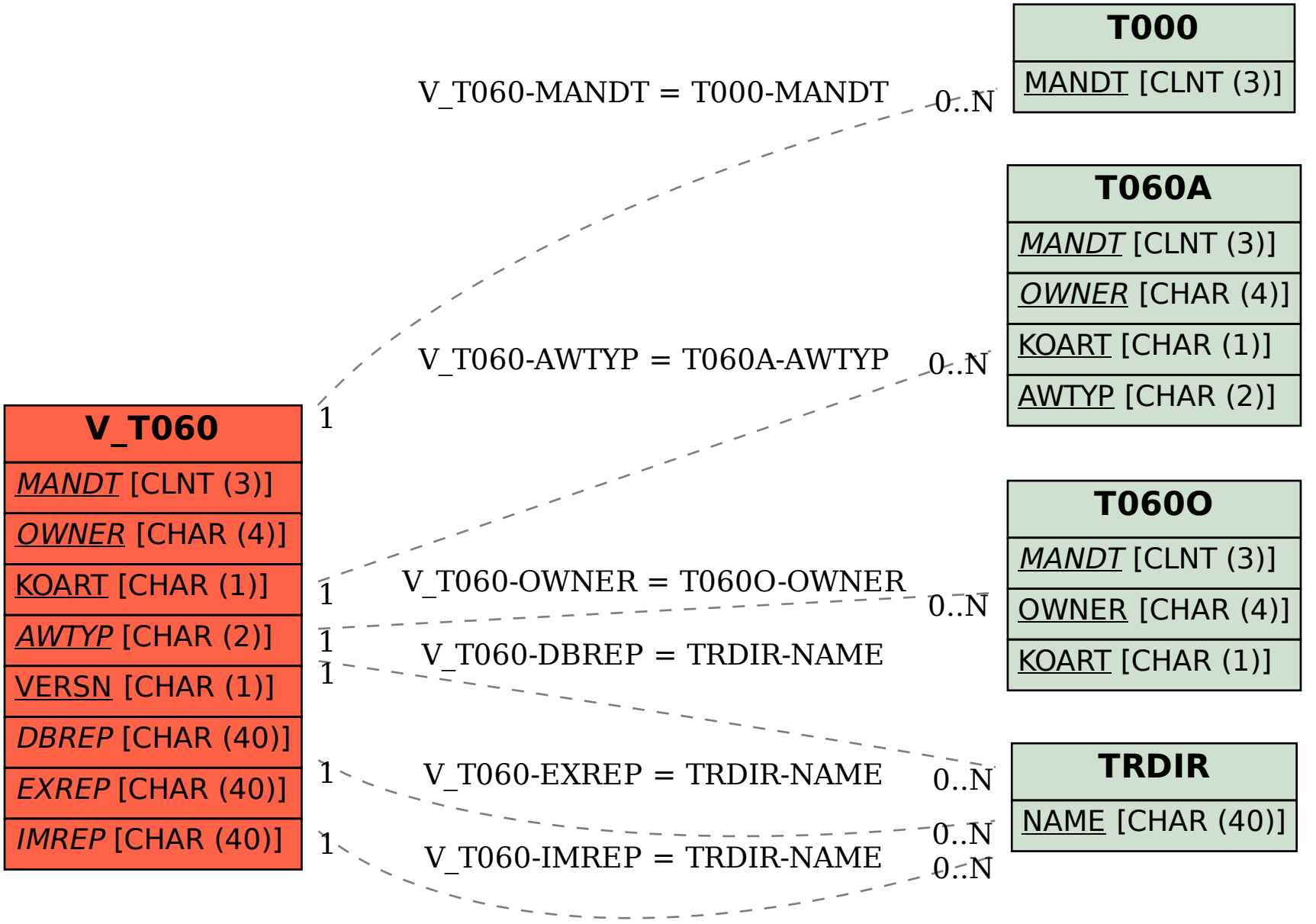SAP ABAP table V_T060 {Generated Table for View}