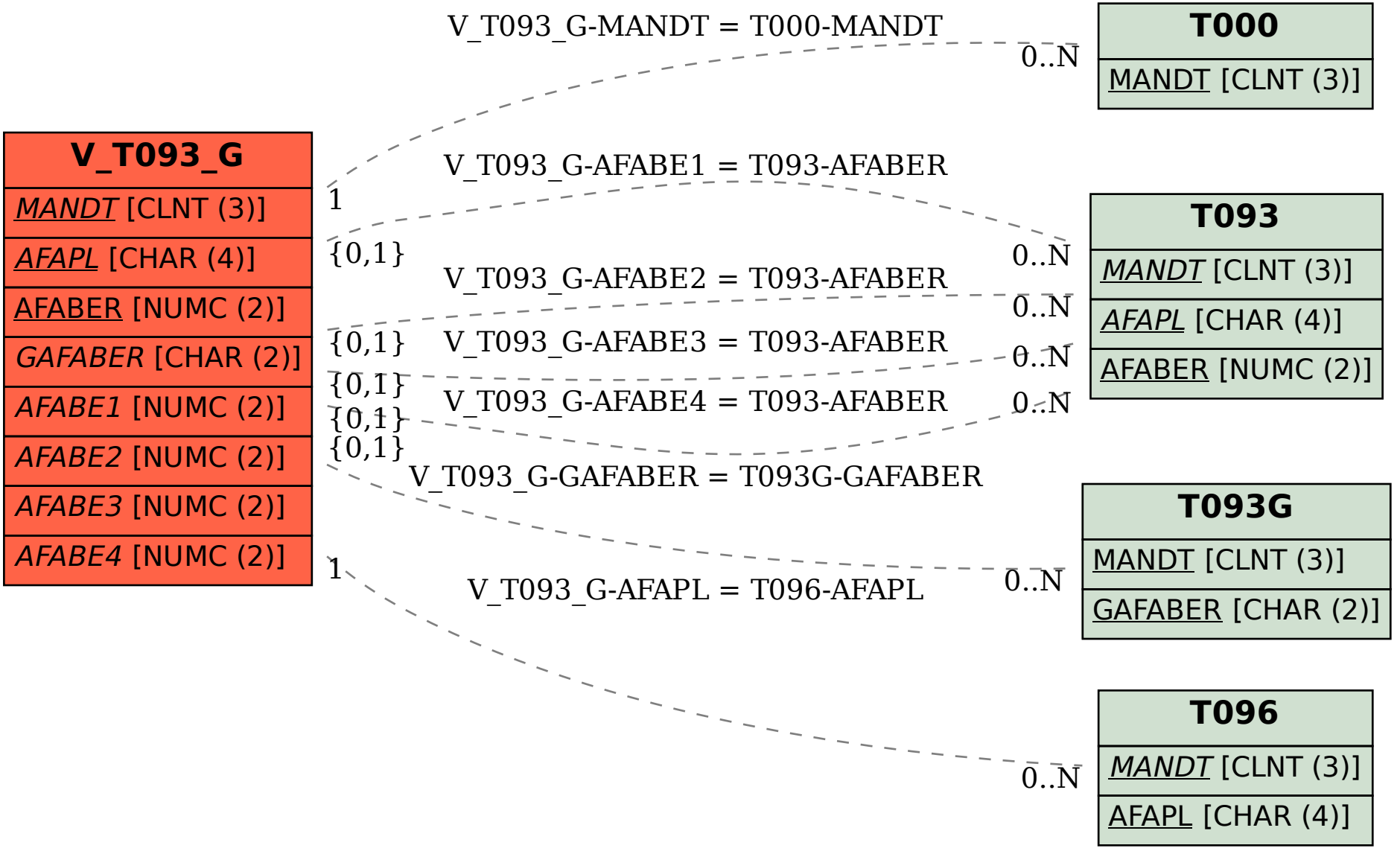SAP ABAP table V_T093_G {Generated Table for View}