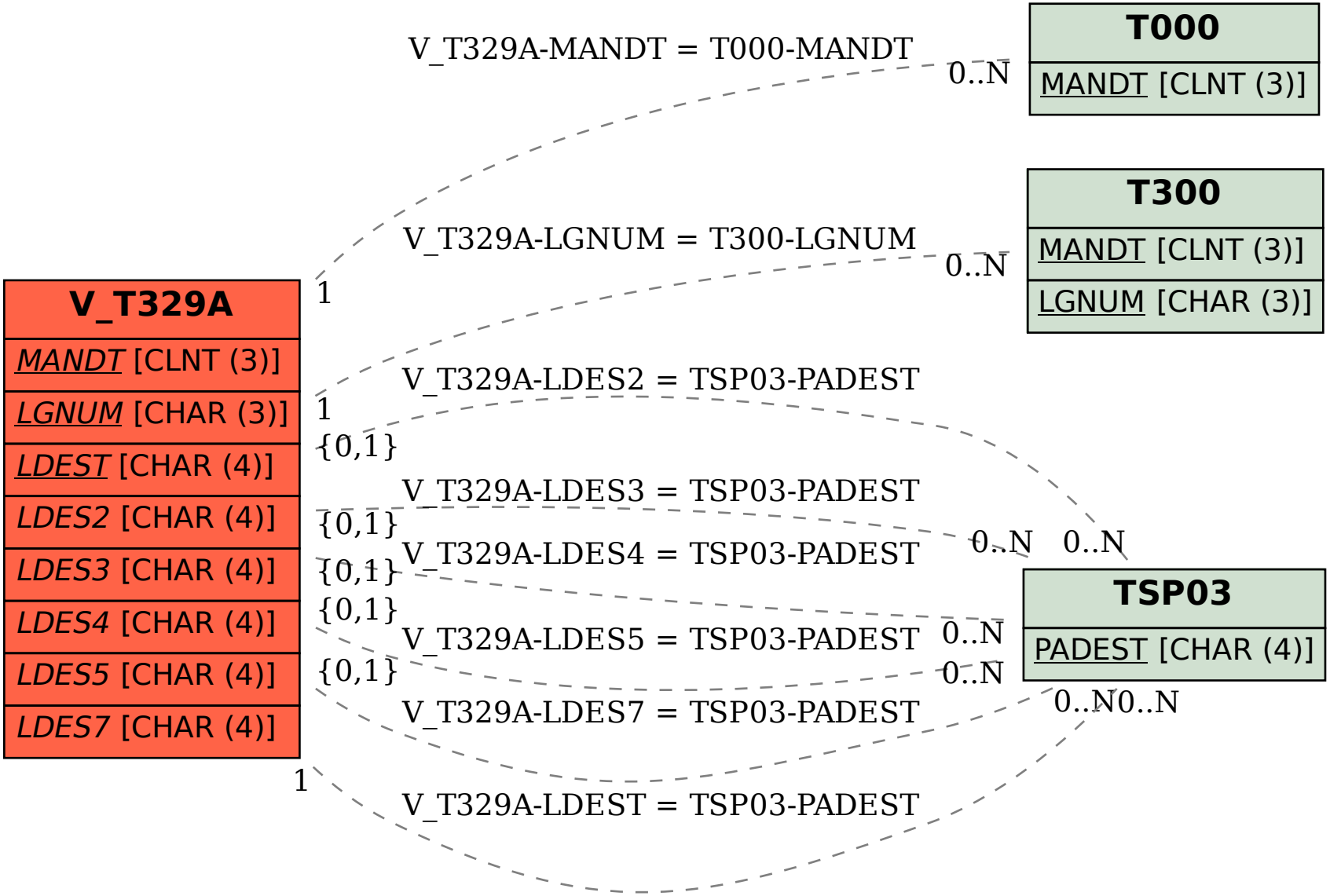SAP ABAP table V_T329A {Generated Table for View}