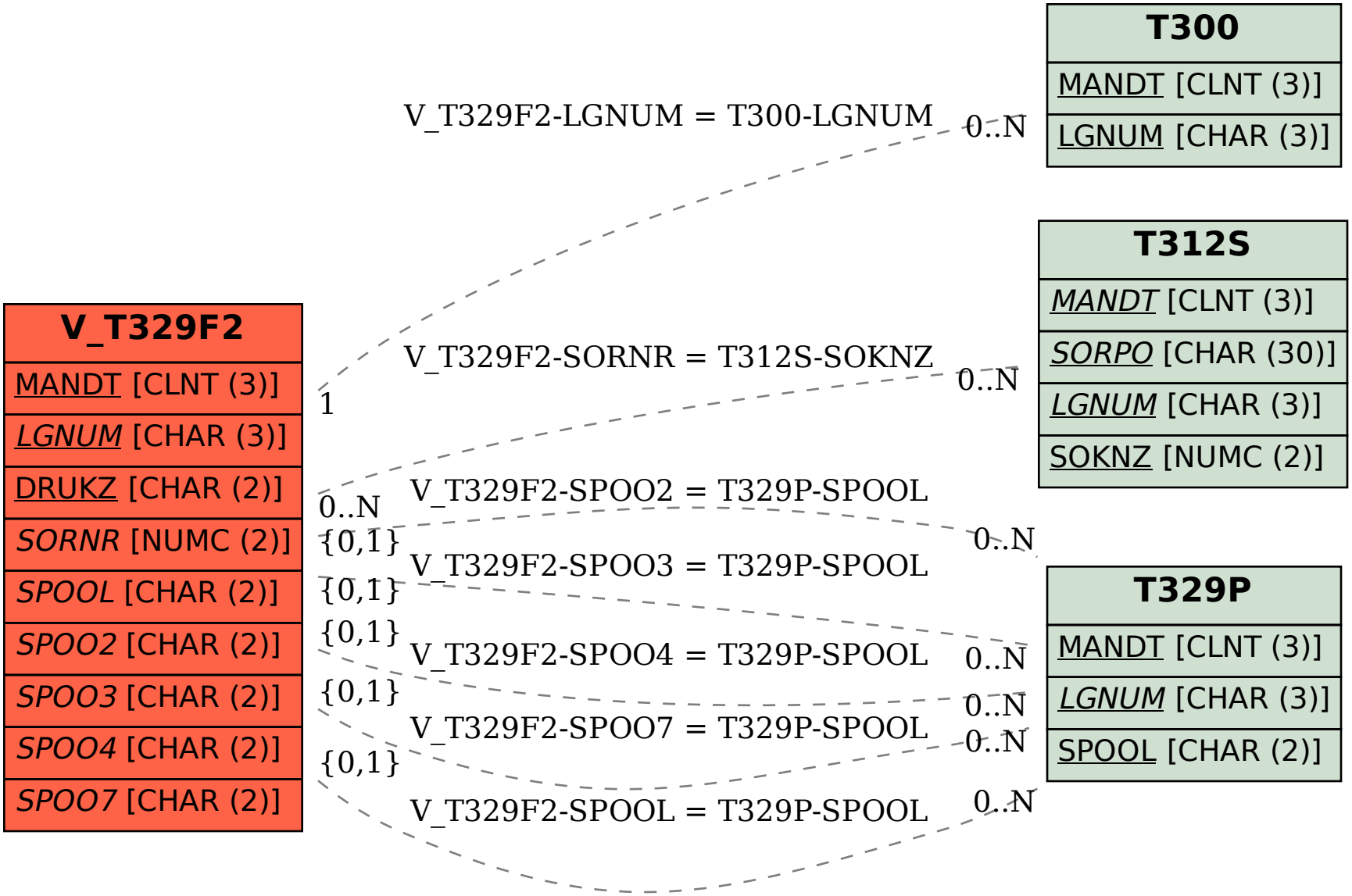SAP ABAP table V_T329F2 {Generated Table for View}