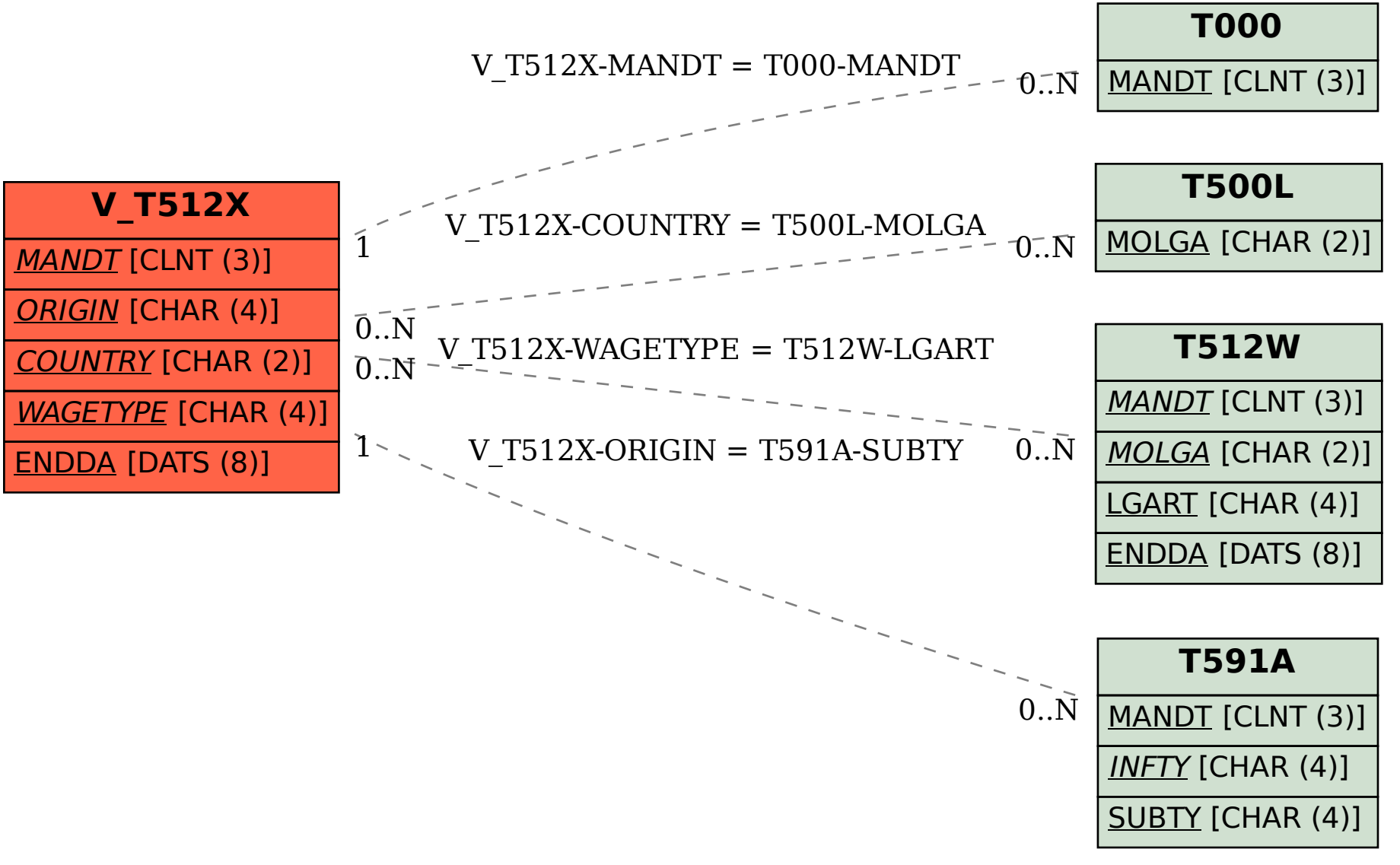SAP ABAP table V_T512X {Generated Table for View}