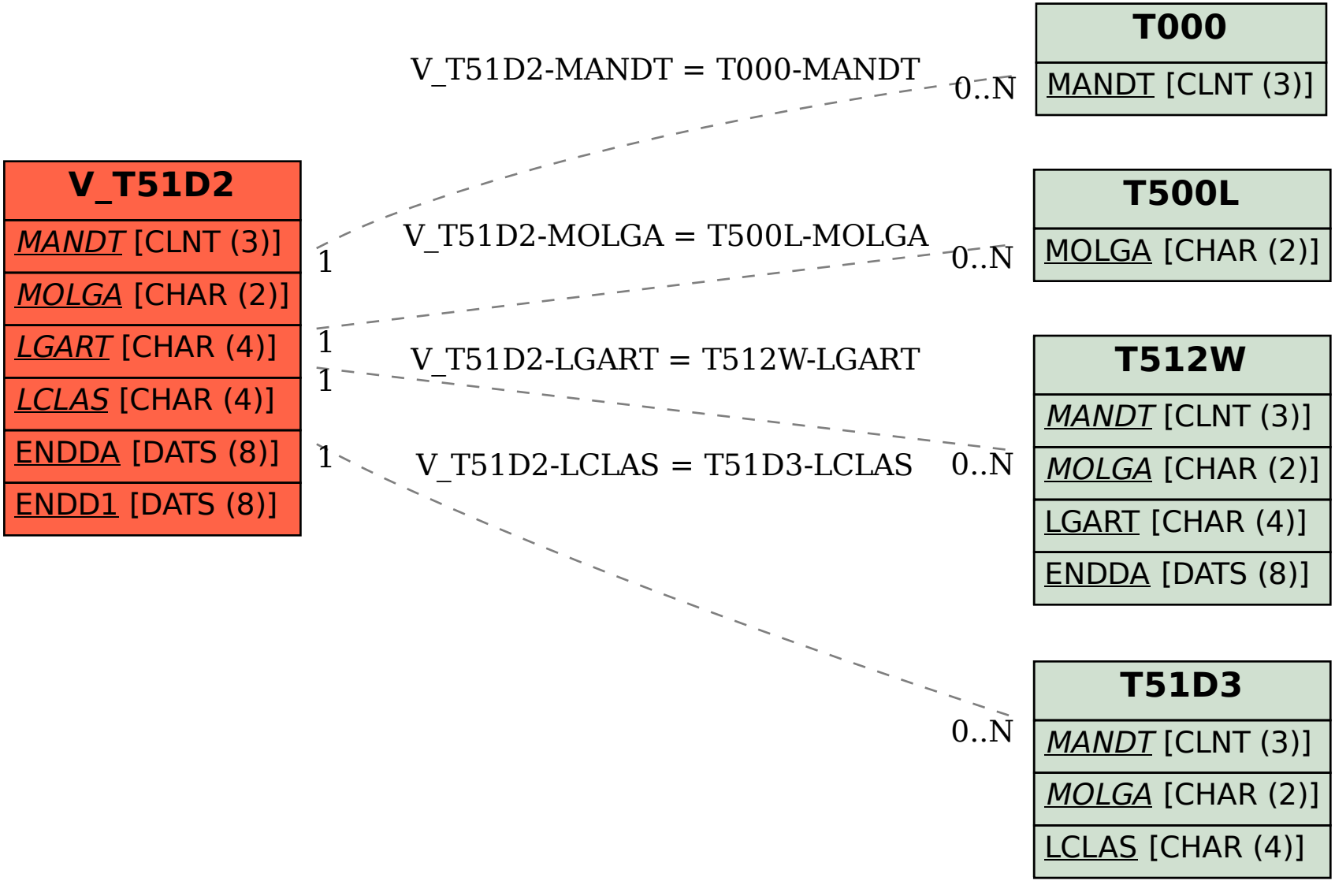SAP ABAP table V_T51D2 {Generated Table for View}