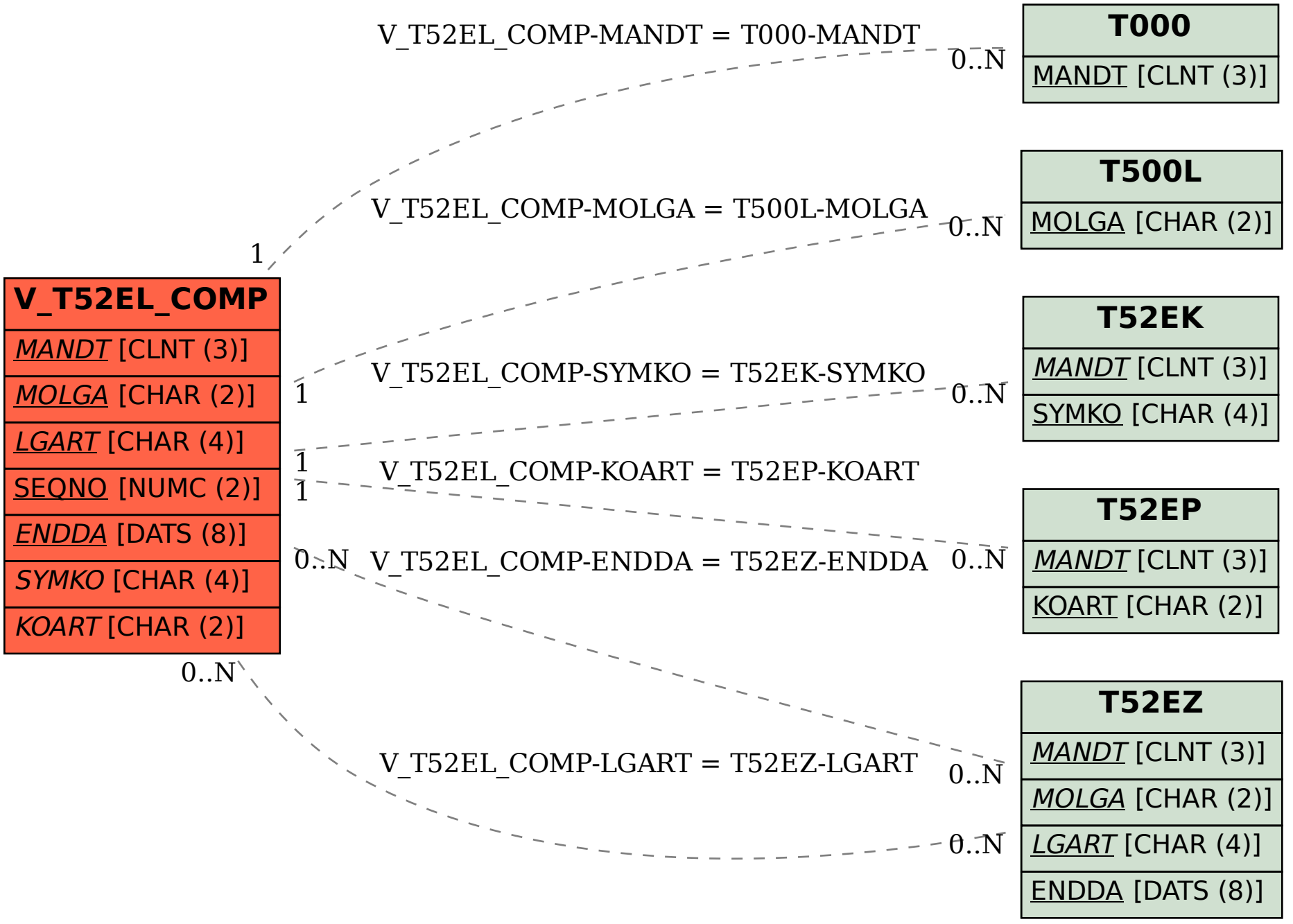SAP ABAP table V_T52EL_COMP {Generated Table for View}