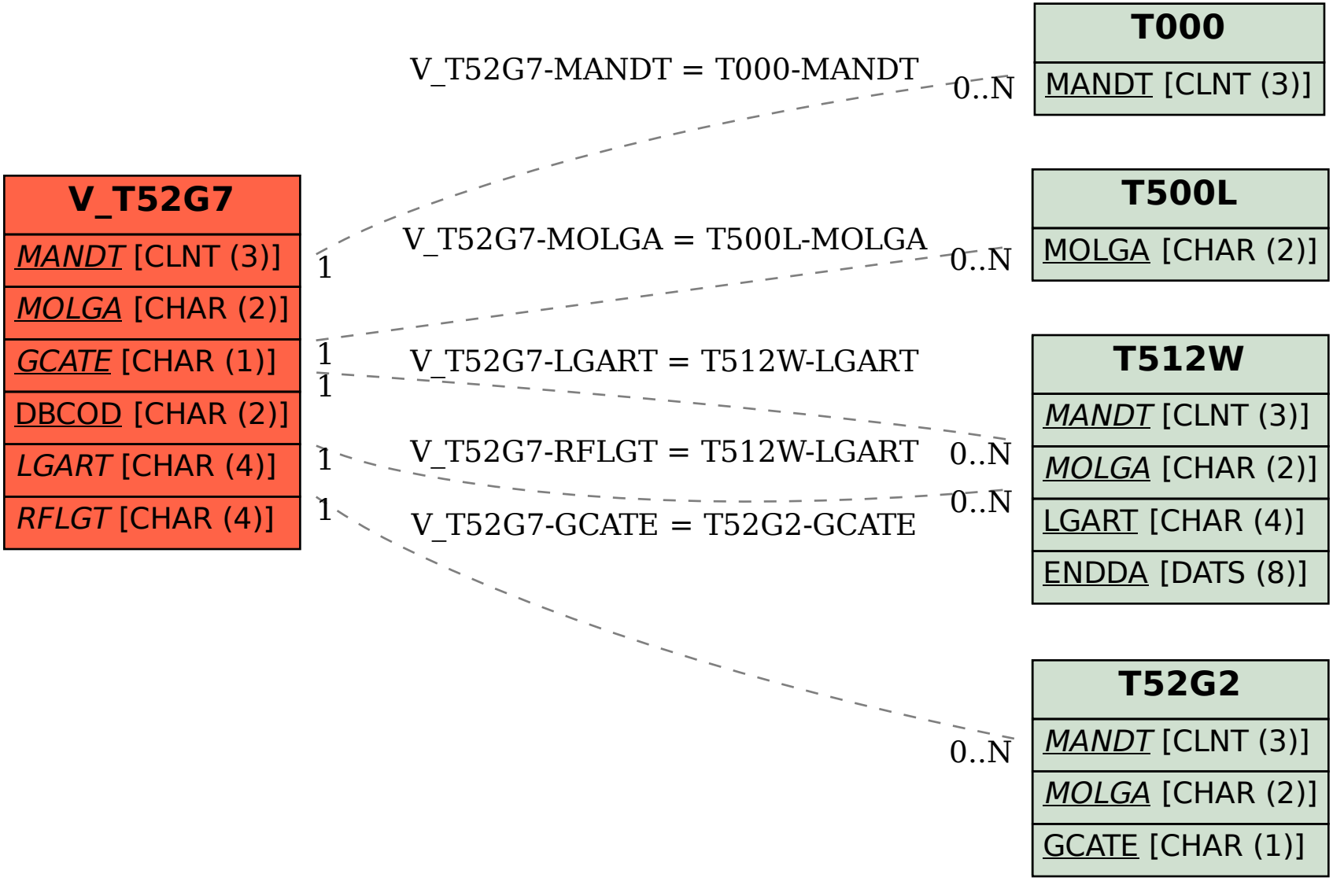SAP ABAP table V_T52G7 {Generated Table for View}