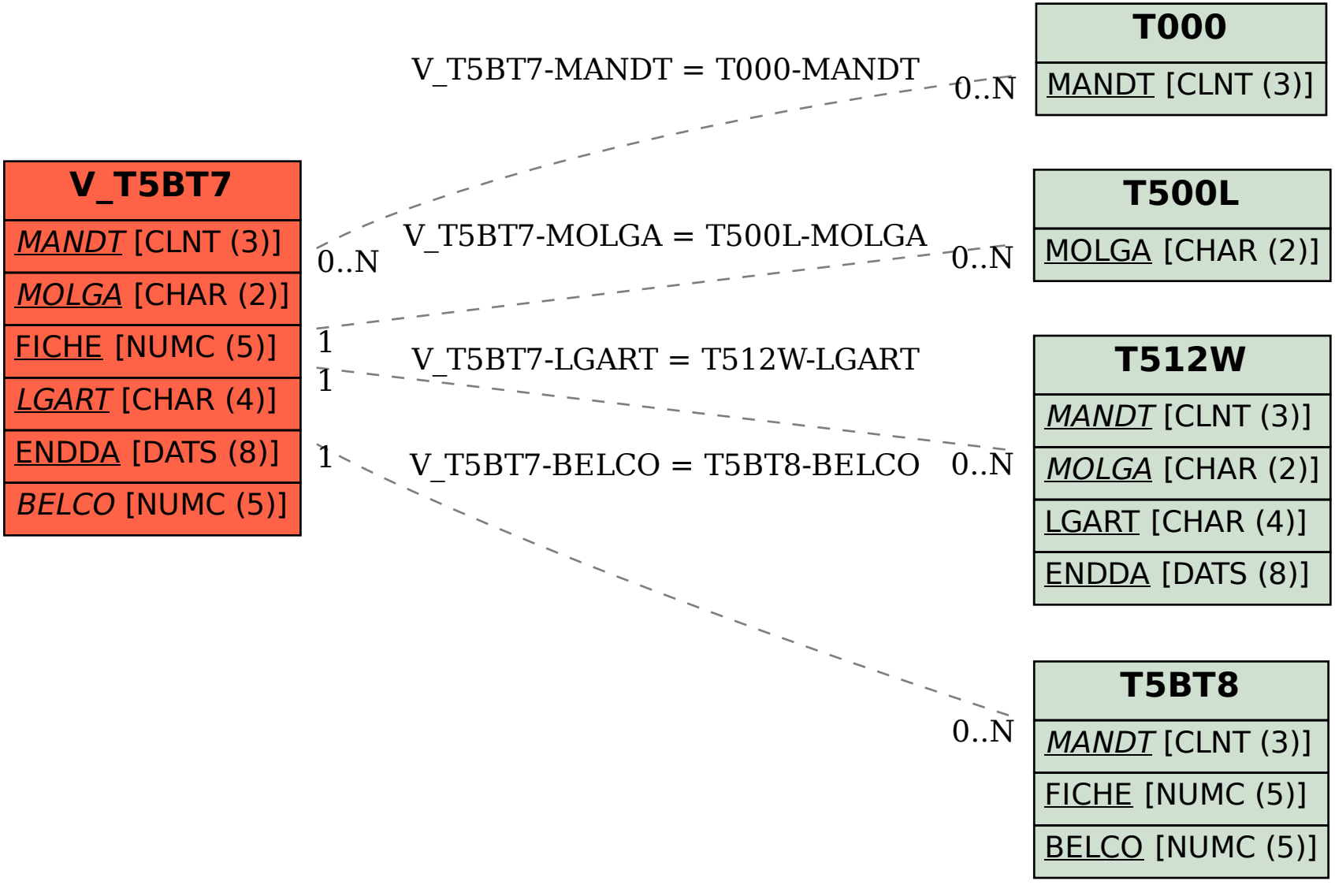SAP ABAP table V_T5BT7 {Generated Table for View}