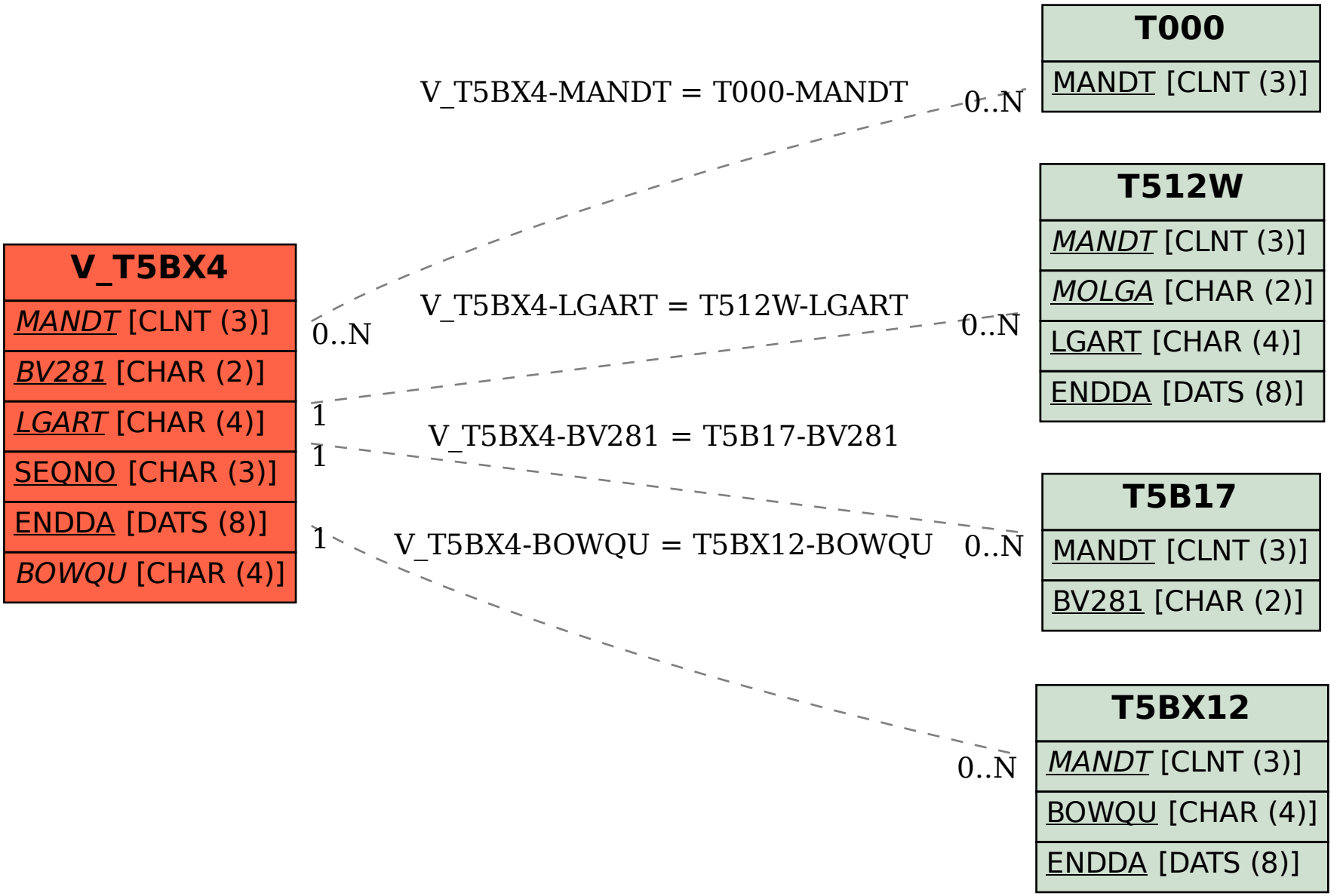SAP ABAP table V_T5BX4 {Generated Table for View}