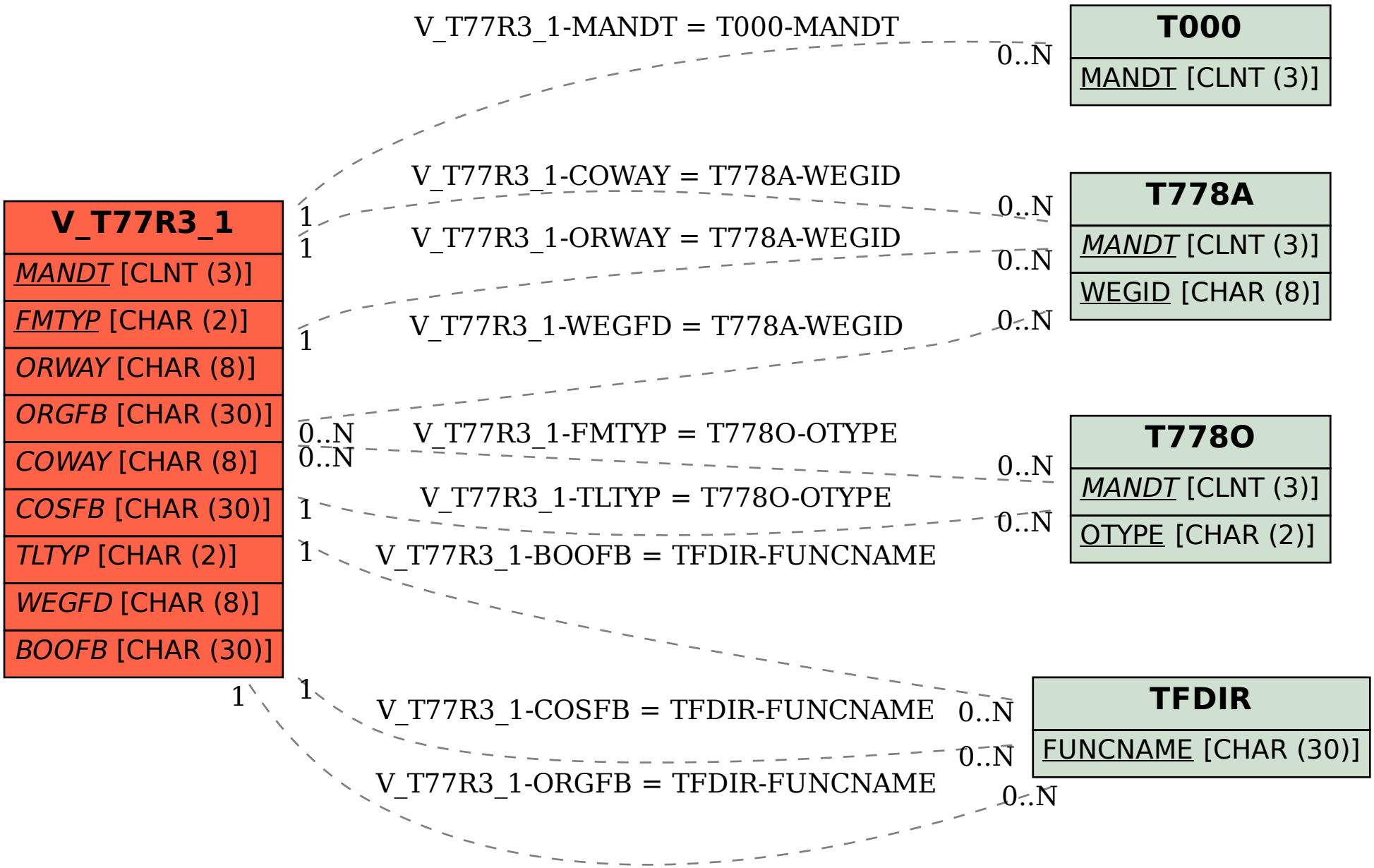SAP ABAP table V_T77R3_1 {Generated Table for View V_T77R3_1}