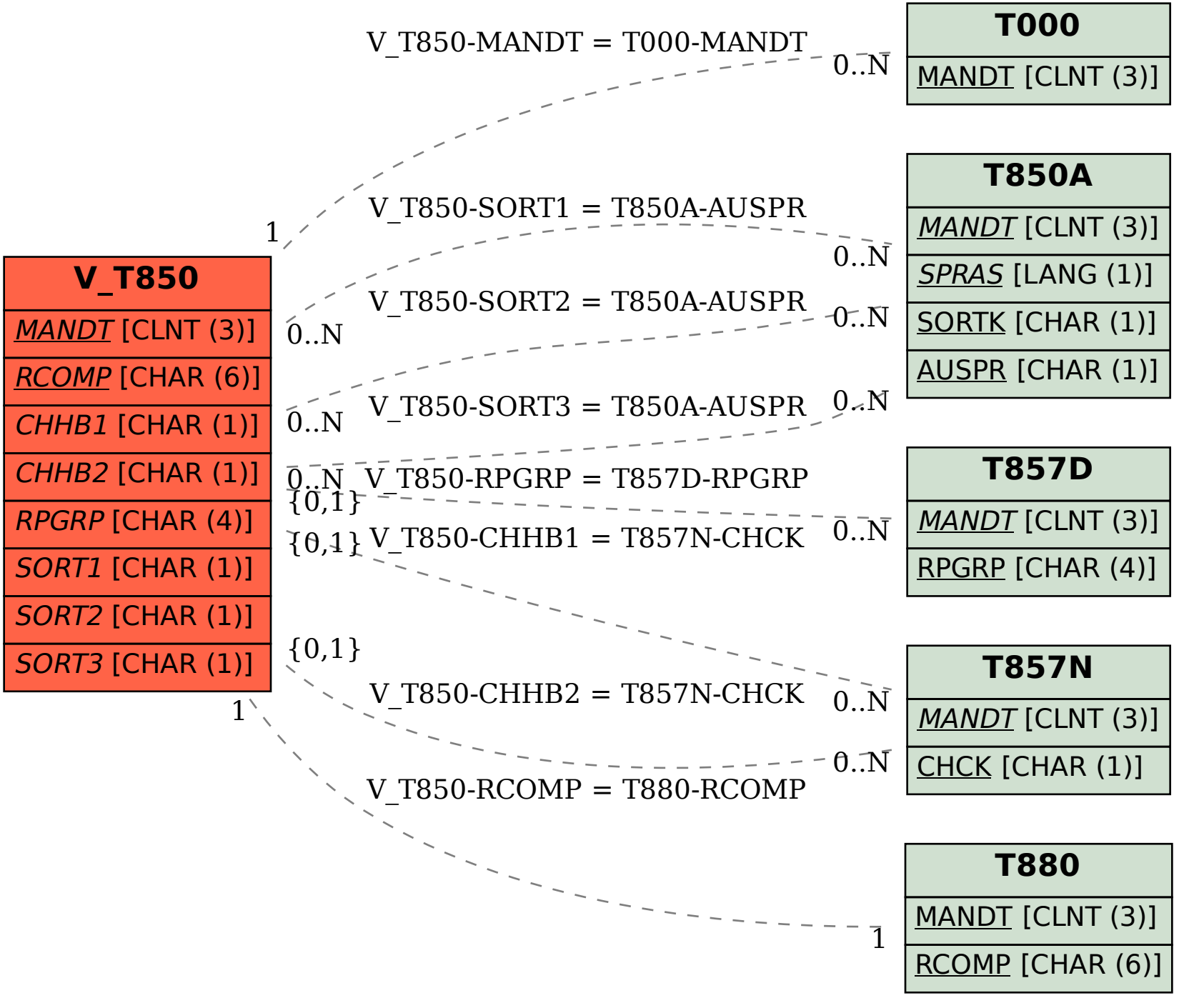SAP ABAP table V_T850 {Generated Table for View V_T850}