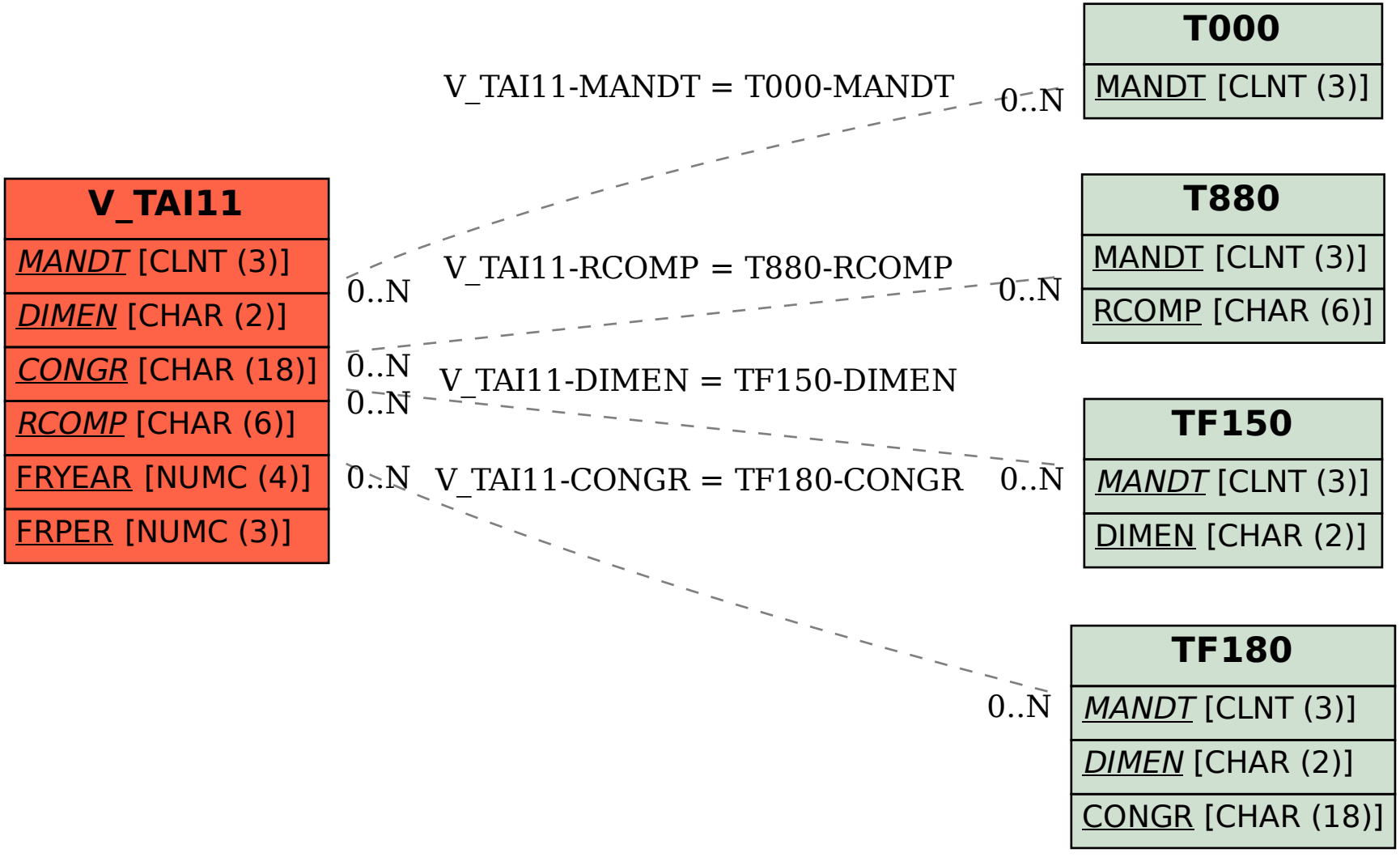SAP ABAP table V_TAI11 {Generated Table for View}