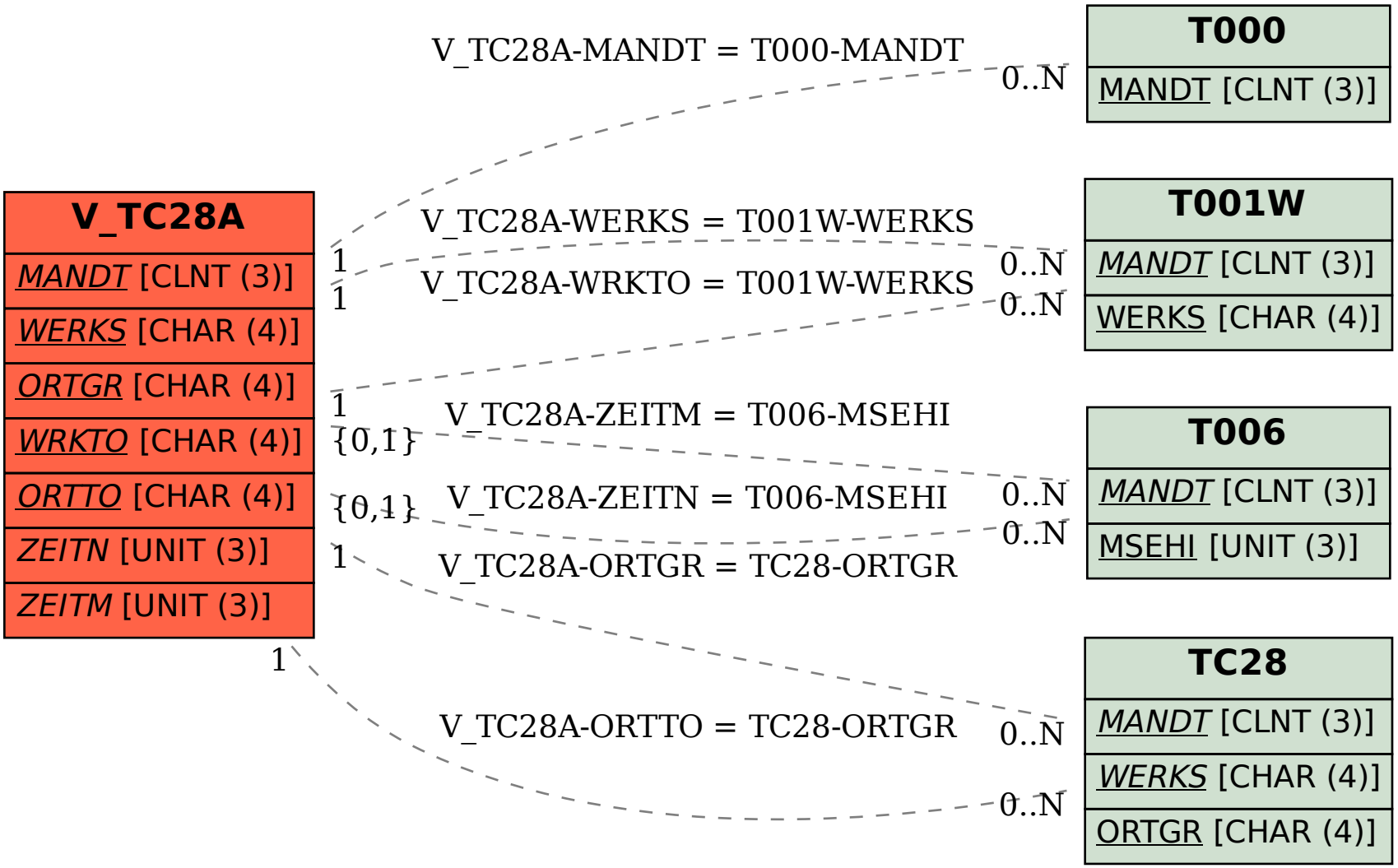SAP ABAP table V_TC28A {Generated Table for View}