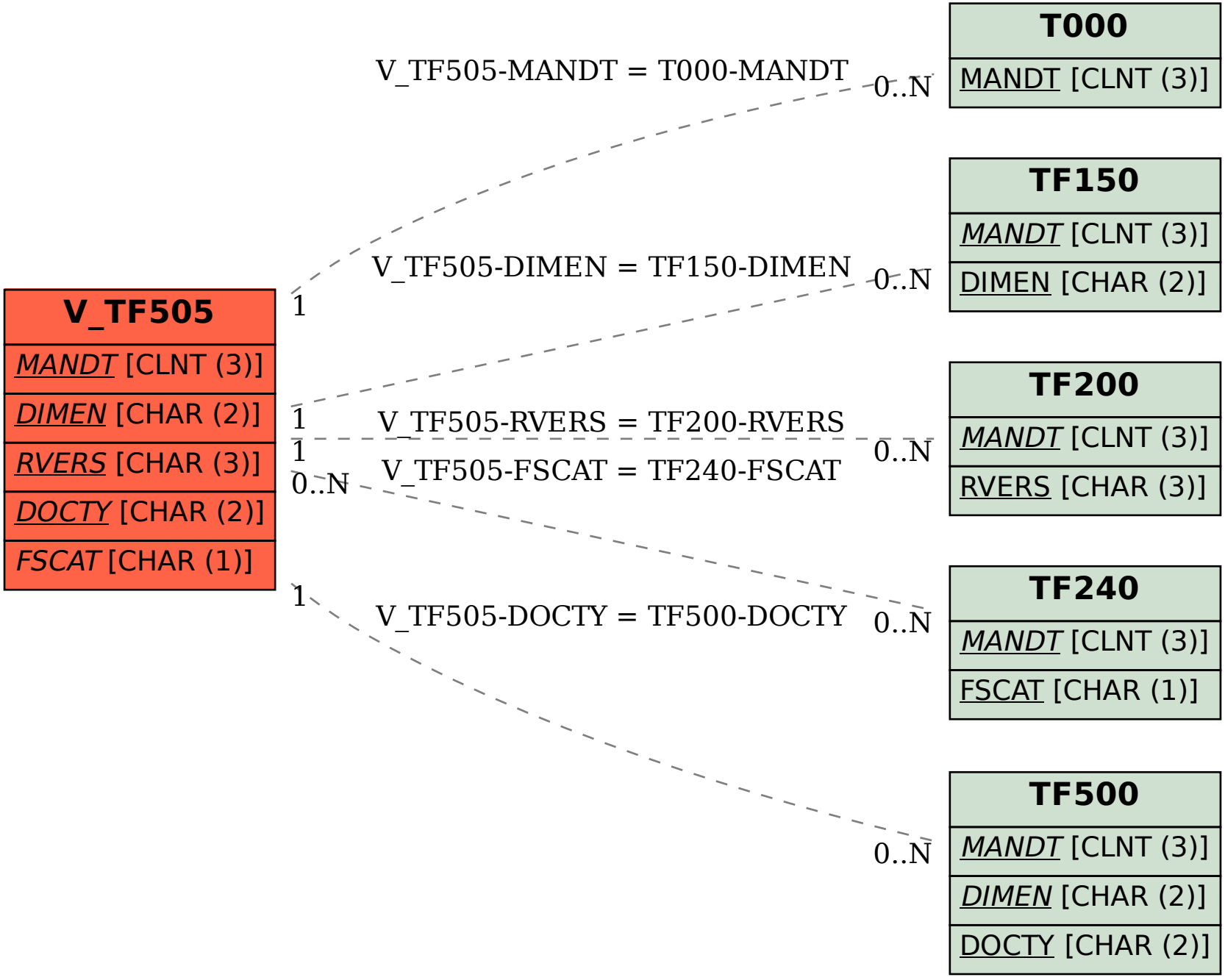SAP ABAP table V_TF505 {Generated Table for View}