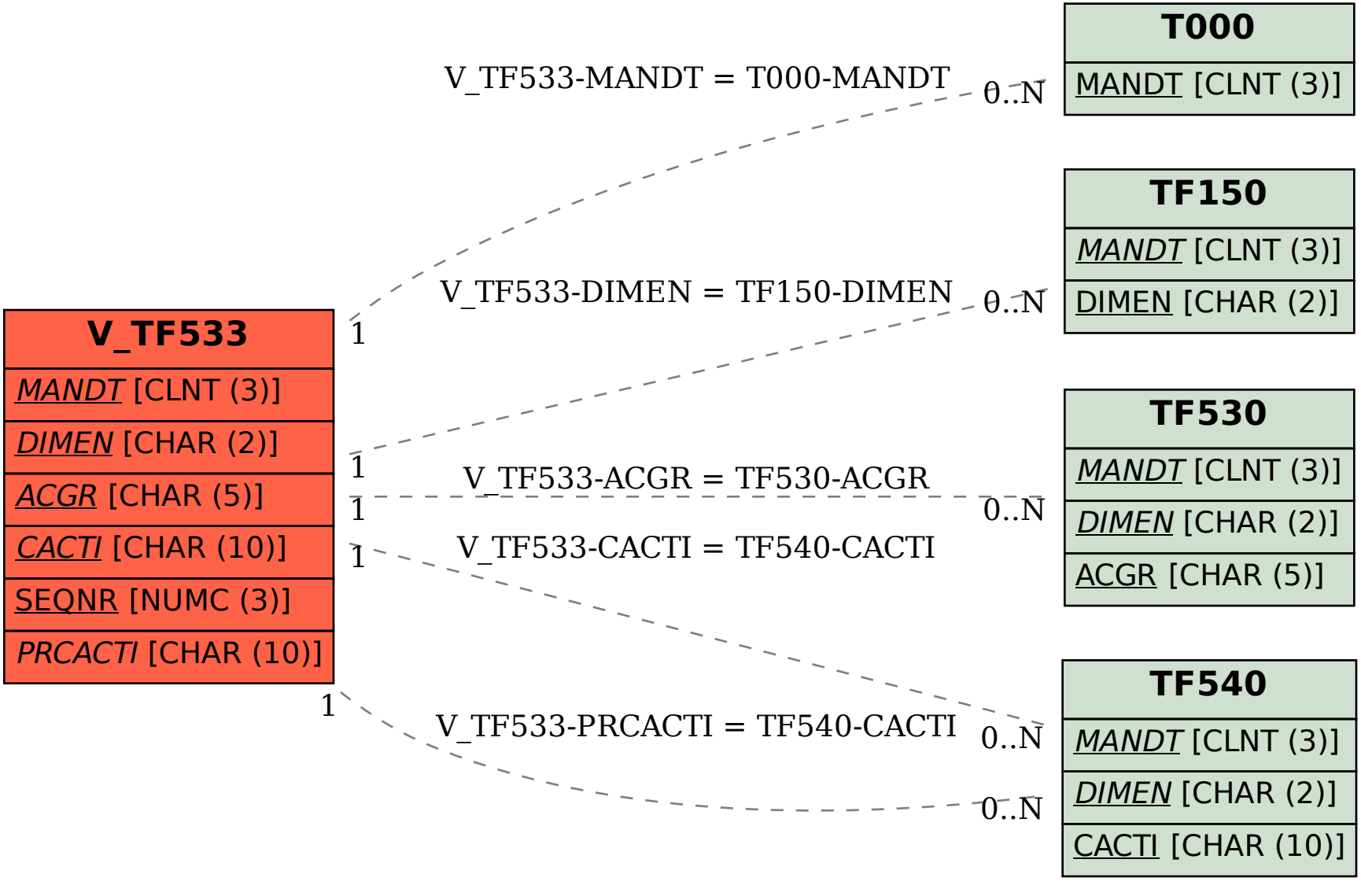SAP ABAP table V_TF533 {Generated Table for View}