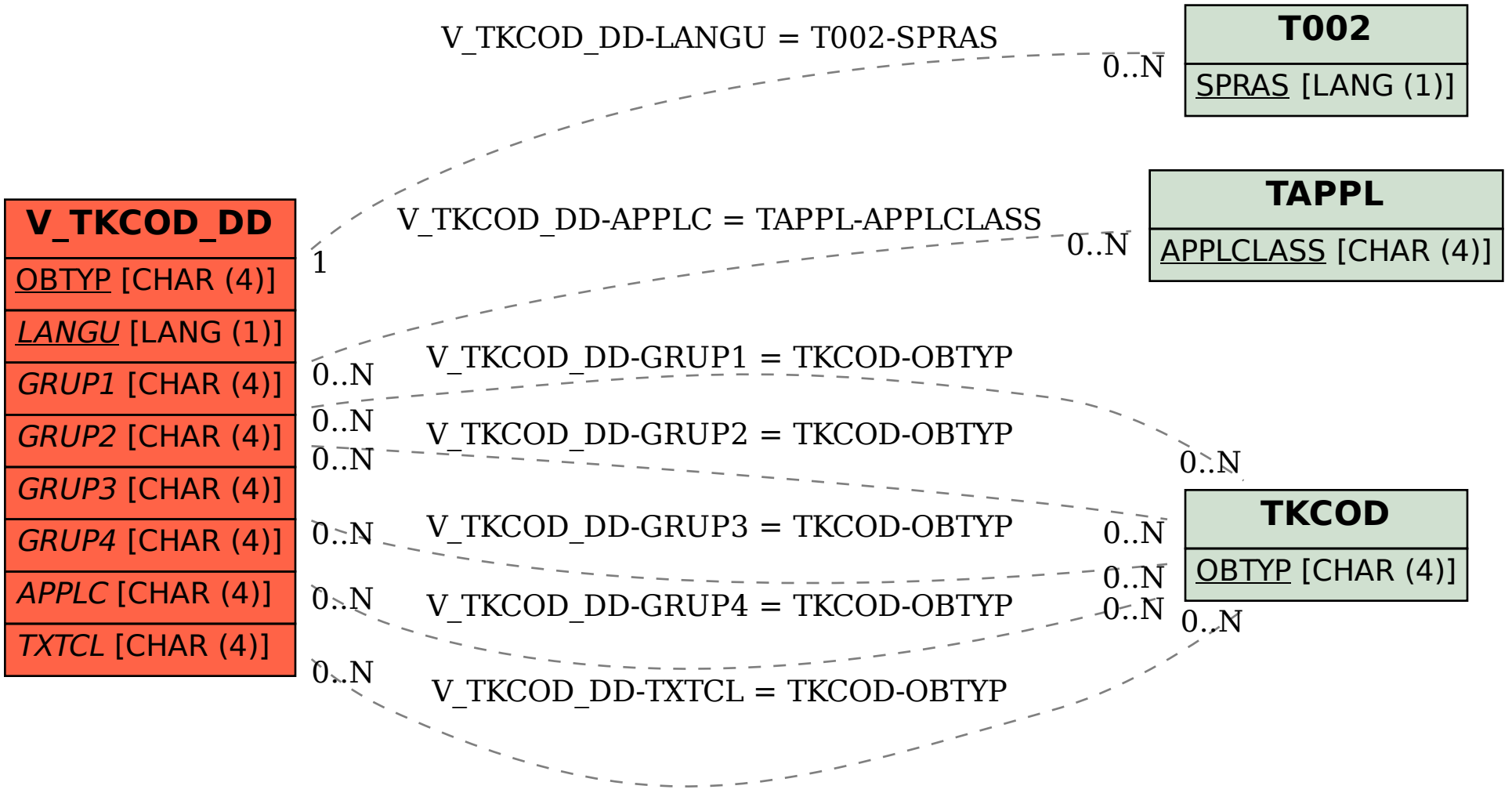SAP ABAP table V_TKCOD_DD {Generated Table for View}