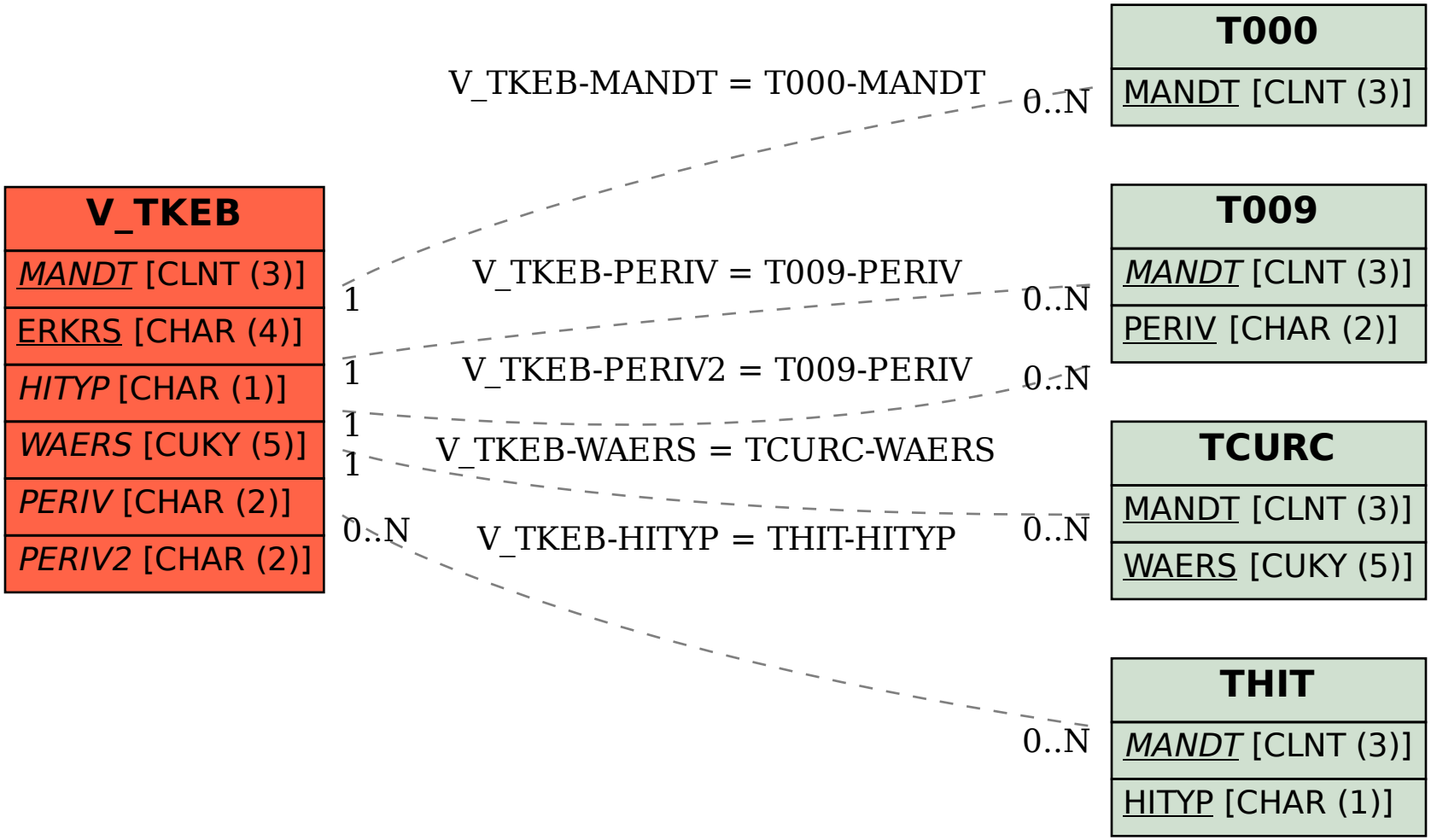SAP ABAP table V_TKEB {Generated Table for View}