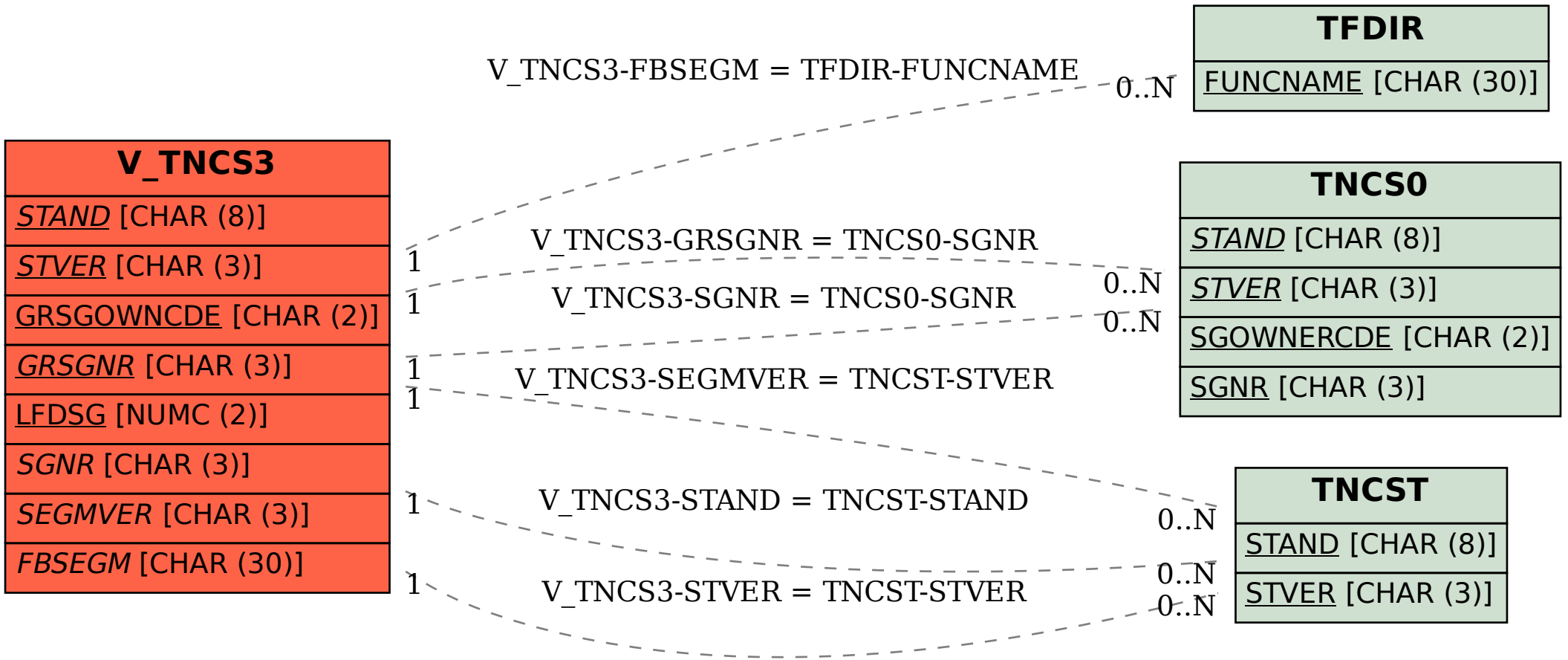SAP ABAP table V_TNCS3 {Generated Table for View}