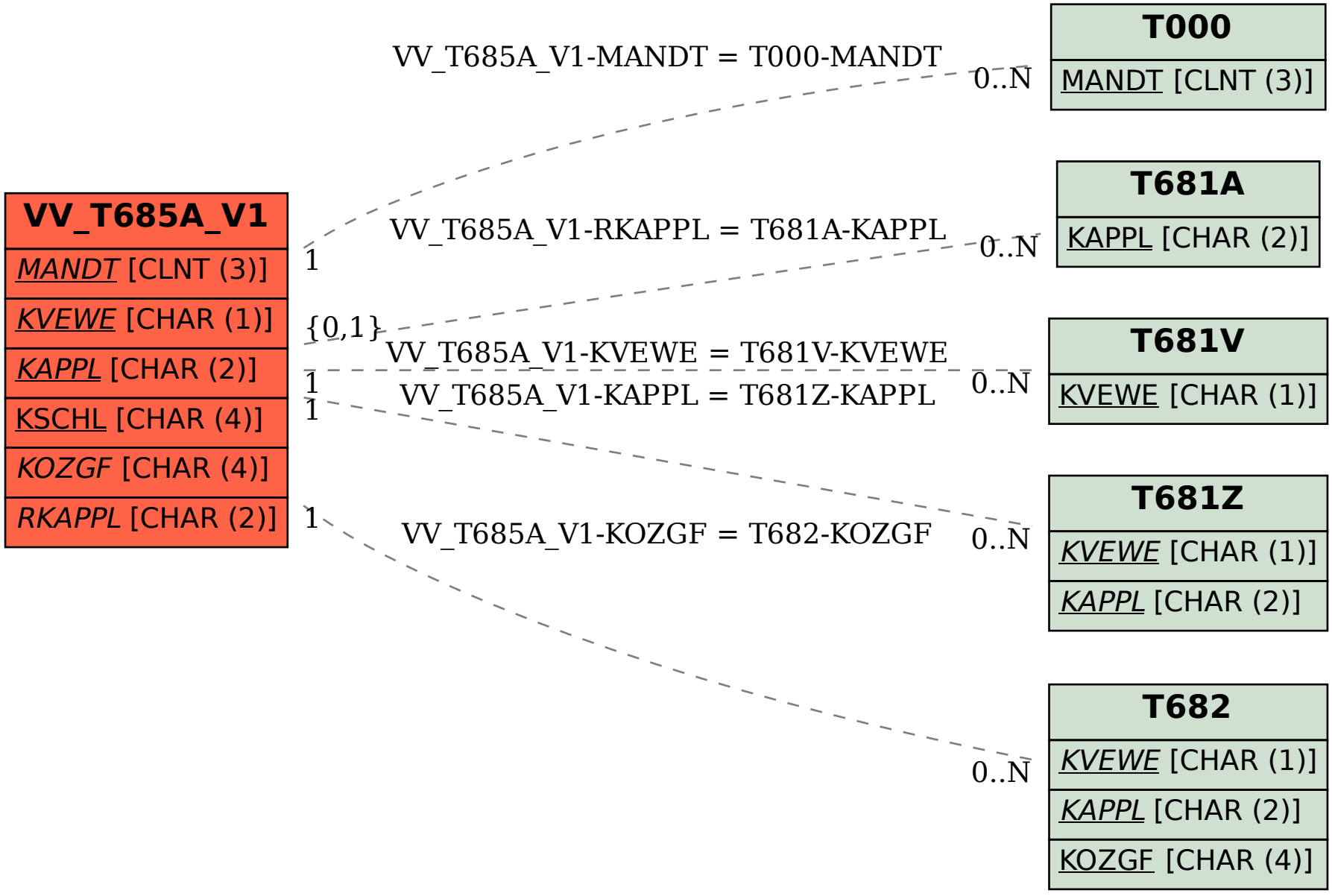SAP ABAP table VV_T685A_V1 {Generated Table for View}