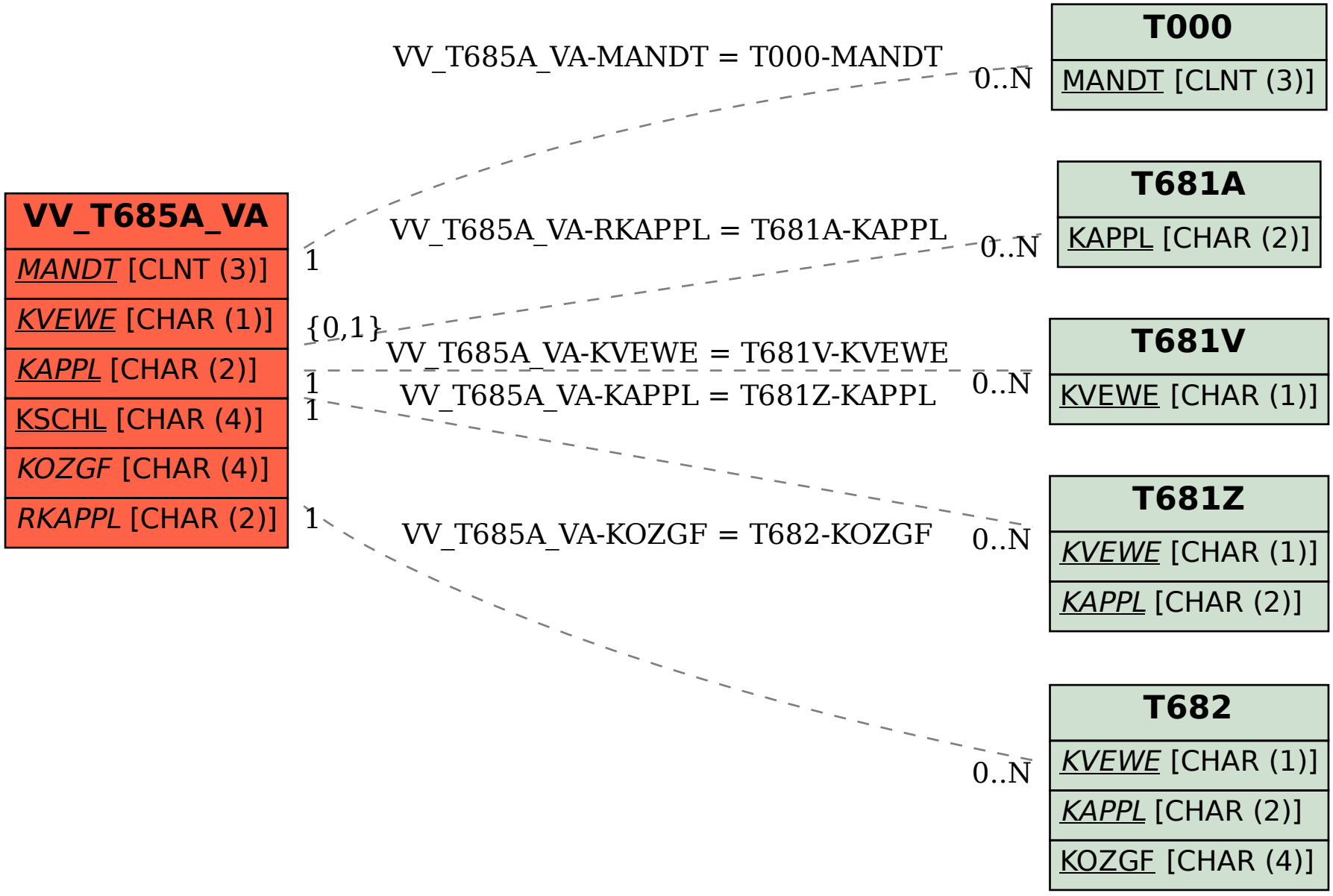SAP ABAP table VV_T685A_VA {Generated Table for View}